belux kido

Kristof Pycke

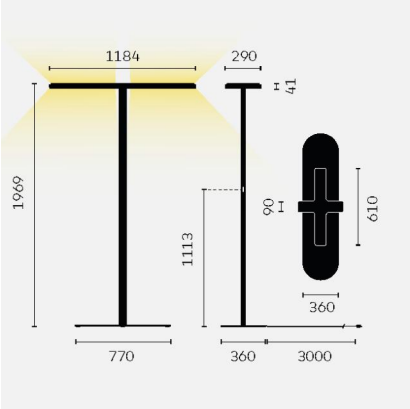

Type	KID50-18X-8030-TD
Order No	KID50-18X-8030-TD
Lamp type/assembly	Standing luminaire
Colour	Black
Light source	LED
Energy efficiency class	LED
Colour temperature	3000K
Colour rendering index	CRI > 80
Operating mode	Dimmable
Operation	On tube
Base	Cross-base
Power cable	Black, 3x0.75mm², L 3000 mm
Mains plug	Schuko plug type E+F
Light distribution	Direct (20%) / indirect (80%)
UGR	< 11
Total luminous flux of luminaire	2 x 11200lm @ 4000K
Power consumption	2x90W
Luminaire efficacy	125lm/W @ 4000K
Safety class	I
Protection type	IP20
Packaging units	3
Weight	30kg
Tooltip Description	New workspace lighting
Guarantee	36 months

reddot
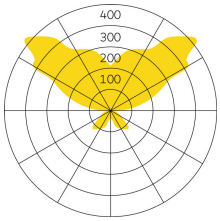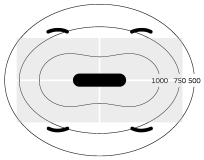
Belux AG
Neufeldweg 6, CH-5103
Möriken
Tel. +41 61 316 74 01
Fax +41 61 316 75 99
www.belux.com
belux@belux.com