BELUX koi-q

Naoto Fukasawa



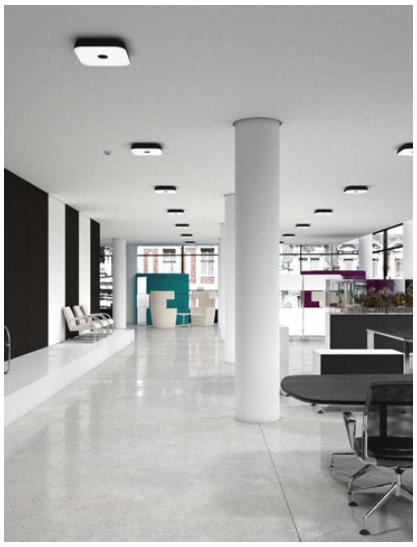

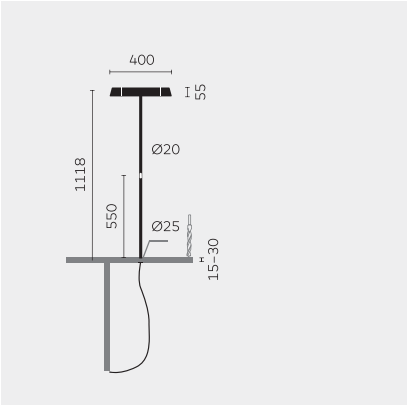

Type	KOIQ46B-17-8030-MS
Order No	KOIQ46B-17-8030-MS
Lamp type/assembly	Desk-mounted luminaire
Version	Universal-D
Adaptation point	For permanent fastening to any tabletop
Cable exit	Underneath the tabletop
Colour	Chrome
Light source	LED
Colour temperature	3000 K
Colour rendering index	>80
Operating mode	Multisens
Operation	Self-adjusting
Ballast (number)	Converter, cable integrated
Lamp head	PC, aluminium metallised
Diffuser	PC, prismatised
Power cable	Black, 3x0.75mm² , L 3000 mm
Mains plug	UK plug type G
UGR	</= 13
Total luminous flux of luminaire	8900 lm @ 4000 K
Power consumption	78W
Luminaire efficacy	114 lm/W
LED service life	55 000 h (L85/B30)
Mains voltage	220-240V, 50Hz
Stand-by consumption	< 0.5 W
Safety class	I
Protection type	IP 20
Packaging units	1
Weight	8.2 kg
Guarantee	5 years

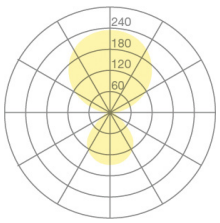

Belux AG
Neufeldweg 6, CH-5103
Möriken
Tel. +41 61 316 74 01
Fax +41 61 316 75 99
www.belux.com
belux@belux.com