belux inline neo

Michel Charlot

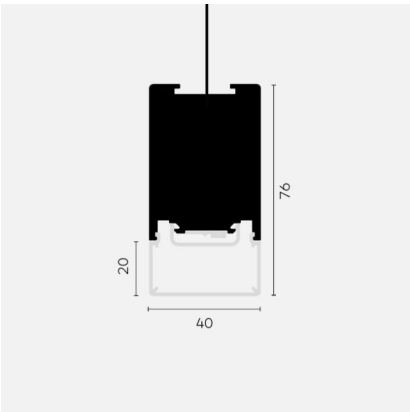

Type	INLINE-60
Order No	INL60-2-AL-8040-DD-3
Lamp type/assembly	Pendant luminaire
Version	Direct
Colour	Aluminium
Light source	LED
Colour temperature	4000 K
Operating mode	Dimmable DALI
Operation	On site
Feed-through wiring	6 x 1,5mm² max. 10A
Lamp housing	Aluminium, PMMA
Light distribution	D - diffus
Current	350 mA
Power consumption	Ca. 23,3W/m
Luminaire efficacy	1997lm/m
LED service life	55'000h (L90/F10)
Mains voltage	220-240V, 50Hz
Safety class	I
Protection type	IP 20
Guarantee	36 months

Belux AG

Neufeldweg 6, CH-5103
Möriken
Tel. +41 61 316 74 01
Fax +41 61 316 75 99
www.belux.com
belux@belux.com