BELUX disk

Daniel Kübler





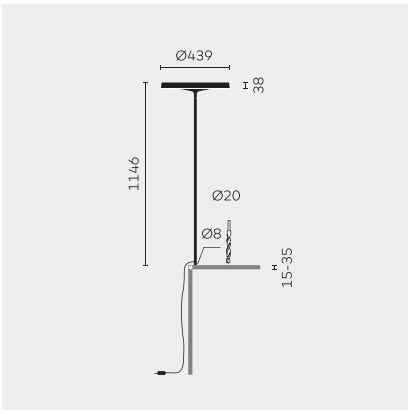

Type	DIS43-16-8030-MS
Order No	DIS43-16-8030-MS
Lamp type/assembly	Desk-mounted luminaire
Version	USM Haller
Cable exit	Lateral
Colour	Chrome
Energy efficiency class	E
Colour temperature	3000K
Colour rendering index	CRI>80
Operating mode	Multisens
Operation	Self-adjusting
Lamp head	Aluminium die-cast
Diffuser	PMMA lens
Tube	Steel, chrome-plated
Power cable	Transparent, 3x0.75mm² , L 4500 mm
Mains plug	UK plug type G
Light distribution	Direct (26.8%) / indirect (73.2%)
Total luminous flux	8590lm
Power consumption	72W
Luminaire efficacy	120 lm/W
LED service life	50'000h
Mains voltage	220-240V, 50/60Hz
Stand-by consumption	< 0.5W
Safety class	I
Protection type	IP 20
Remark	Not compatible with height adjustable tables
Guarantee	5 years

MINERGIE®

light of the future

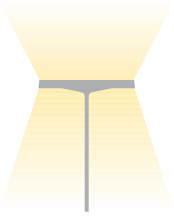

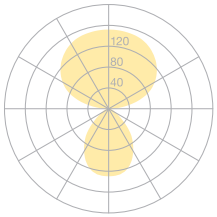

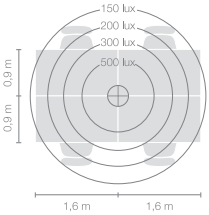

?=80.06% CD/1000lm

Belux AG
Neufeldweg 6, CH-5103
Möriken
Tel. +41 61 316 74 01
Fax +41 61 316 75 99
www.belux.com
belux@belux.com